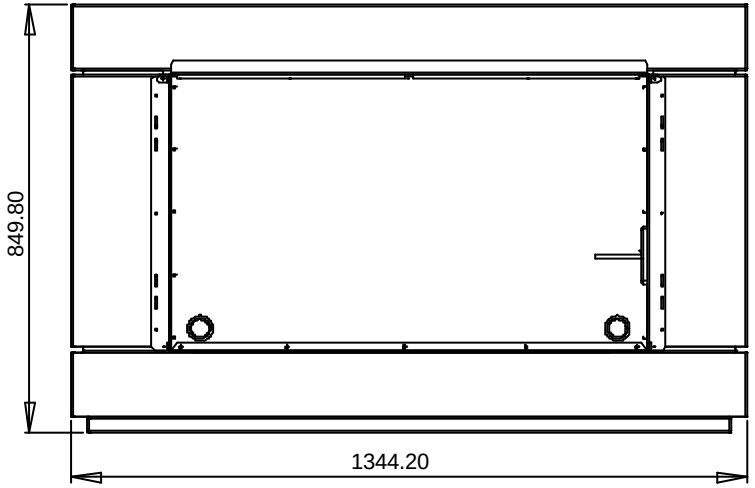

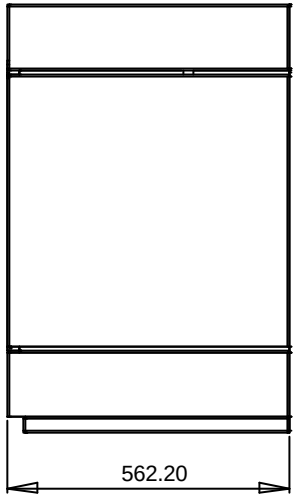

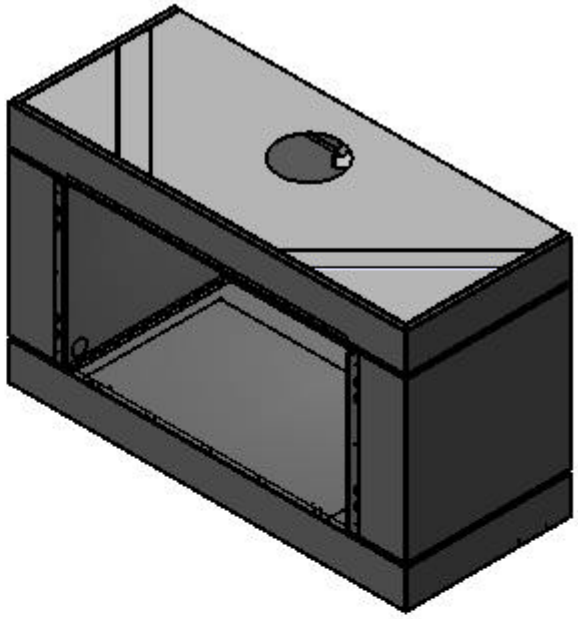

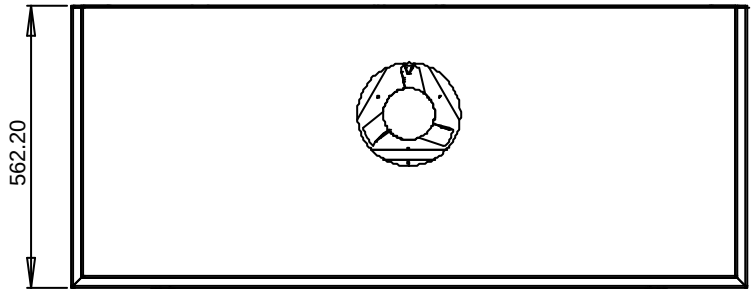

- Powder coated to your preferred colour from our selection.
- Made from 1.2mm Zintec sheetmetal
- Gas and electrical exit points on the lower rear of the FSU
- No assembly of the FSU required
- 3.6m Flue kit with cowl supplied

No.	Date	Revision	Initials

Drawing Rev: 0

Units: mm

Date: 15-05-08

escea. www.escea.co.nz

escea. Ltd
31 Devon St
Dunedin
Ph: 03 479 0302
Fax: 03 479 0301

Designed by

Drawn by: Alex Hodge

Checked by

Title: IB850 AUS Free Standing Unit

Material

Sheet: 1 of 1

Tolerances (Unless otherwise stated)
Linear ±0.2
Radial ±0.1
Angular ±0.5°

R_a (Unless otherwise stated): 3.2

Scale (Unless otherwise stated): 1:1

Rev Date:

Paper size: A3

DO NOT SCALE

Drawing No. 1